LOMAZOO

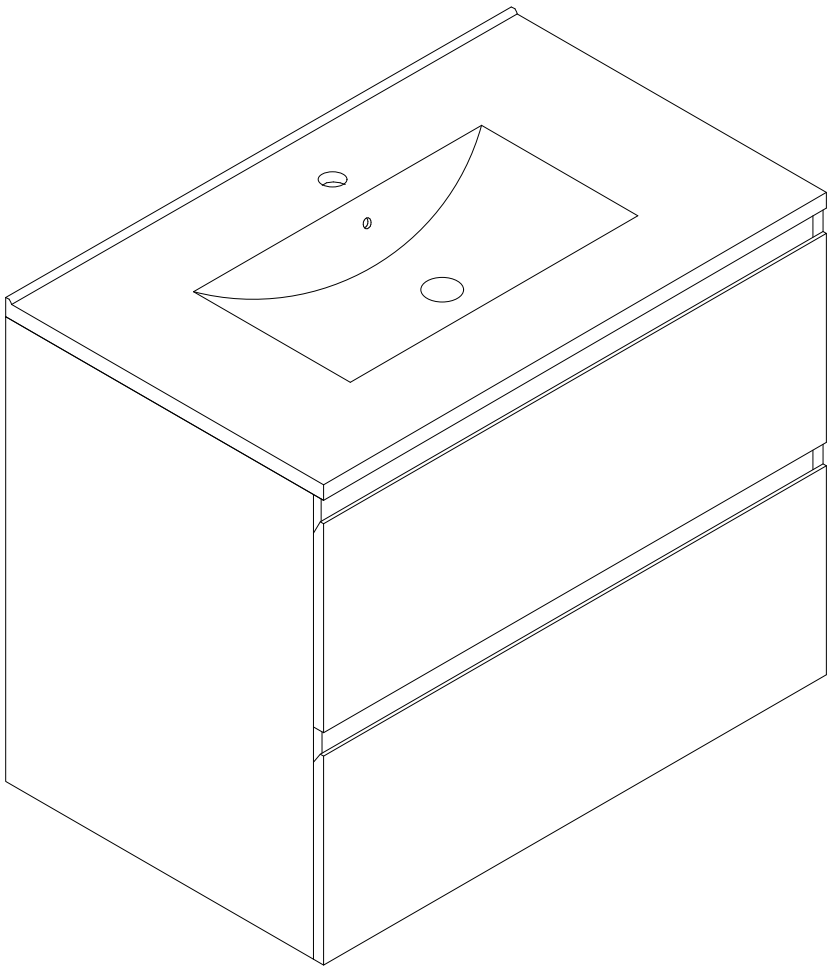

INSTRUCTION MANUAL

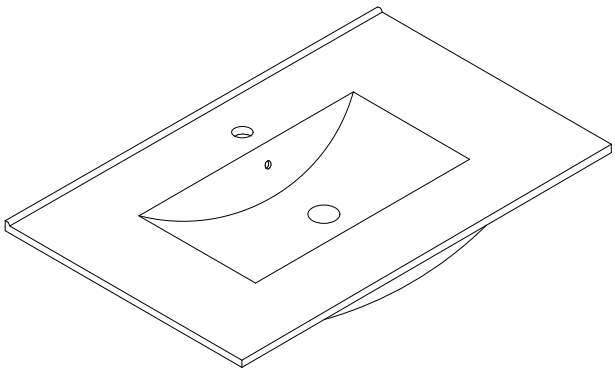

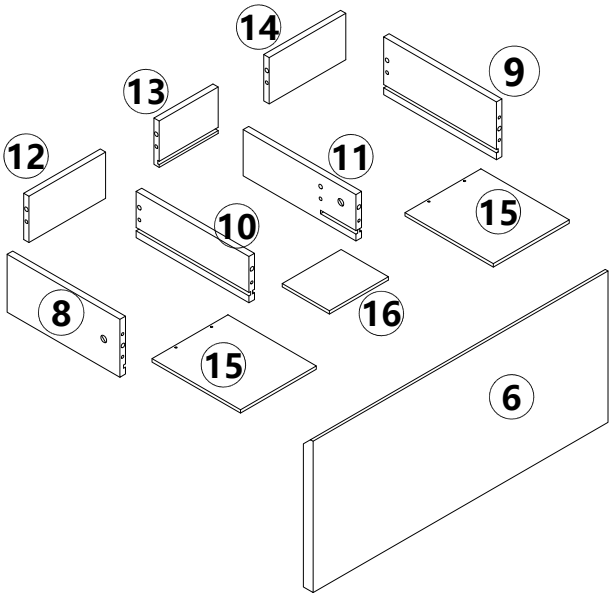

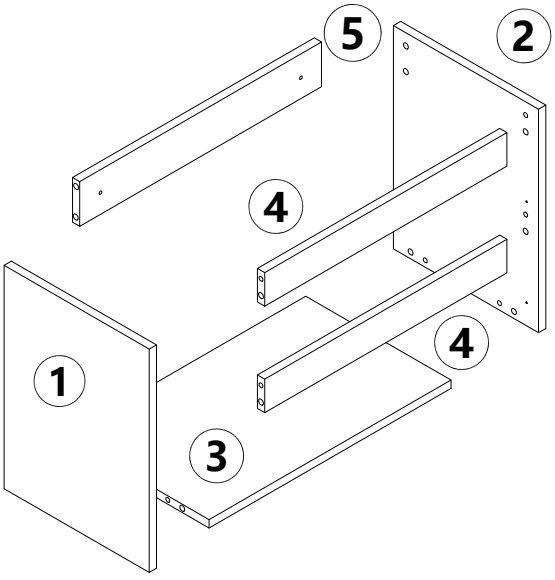

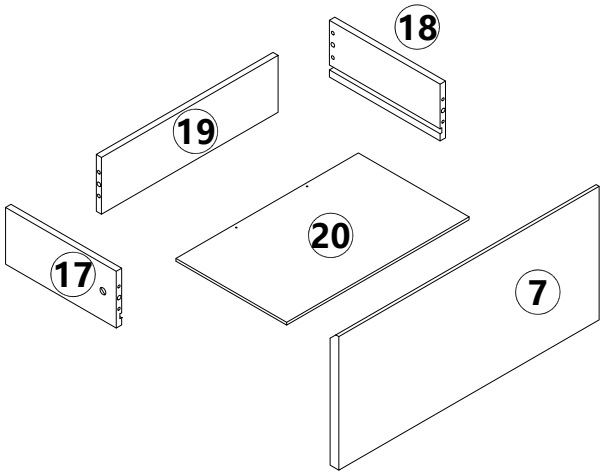

Ⓐ X26	Ⓑ X26	Ⓒ X28	Ⓓ X2	Ⓔ X46	Ⓕ X26	Ⓖ X2	Ⓗ X2
	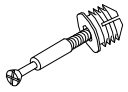		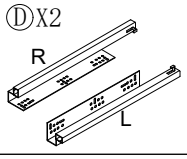	 M4x14mm		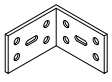	 Ø10x42mm
Ⓘ X2  M6x60mm							

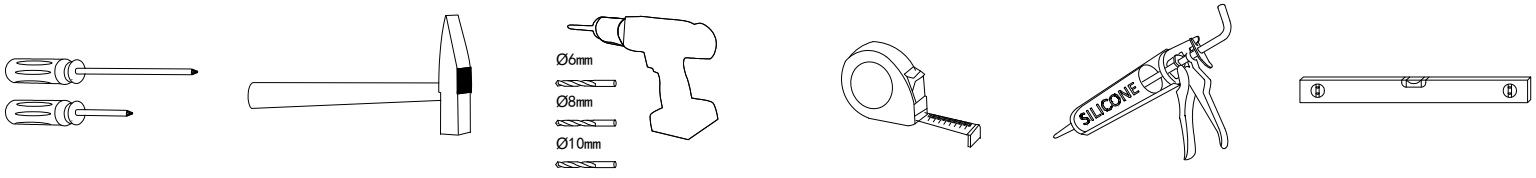

Step1	Ⓑ X12 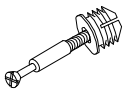	Ⓒ X8 		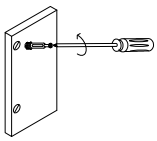			

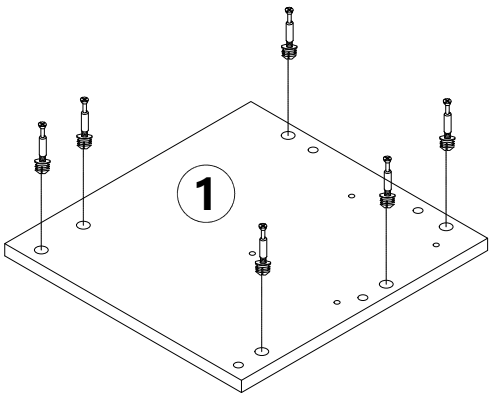

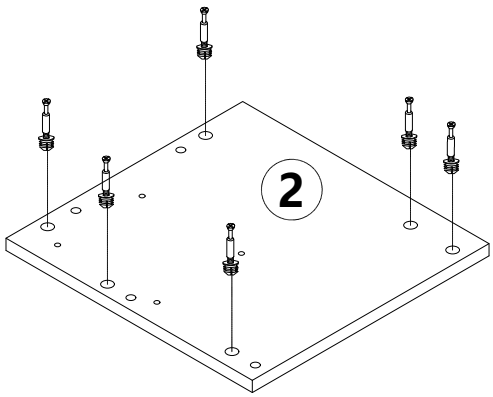

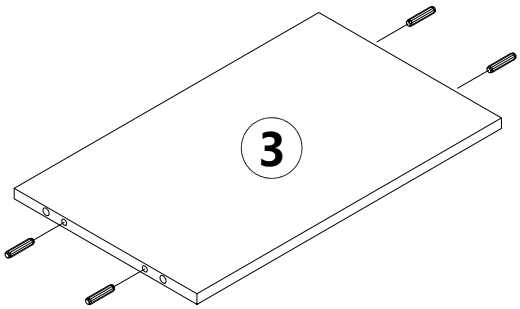

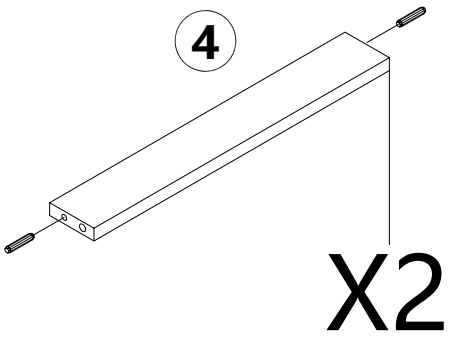

Step2

Ⓑ X10	Ⓒ X12					
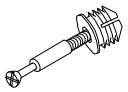			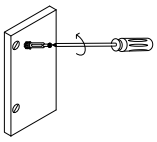			

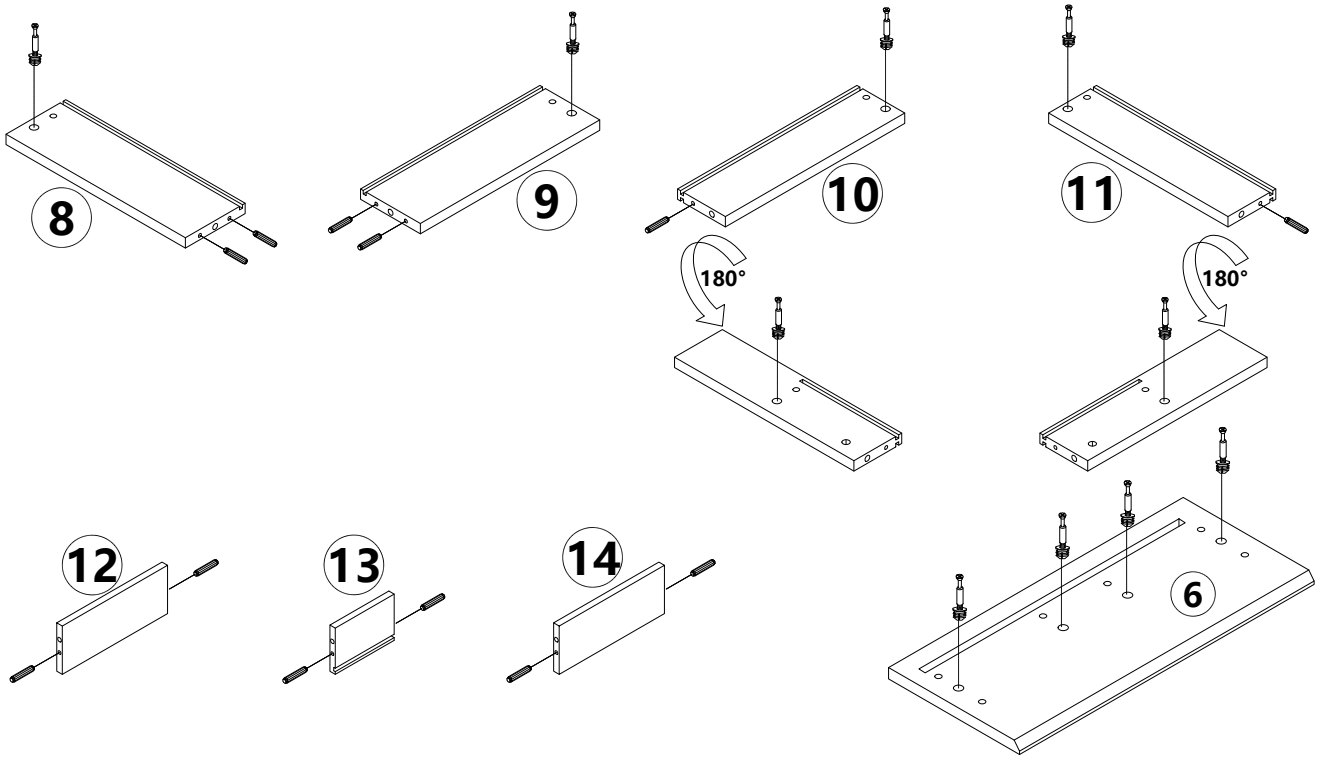

STEP3

Ⓑ X4	Ⓒ X8					
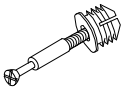						

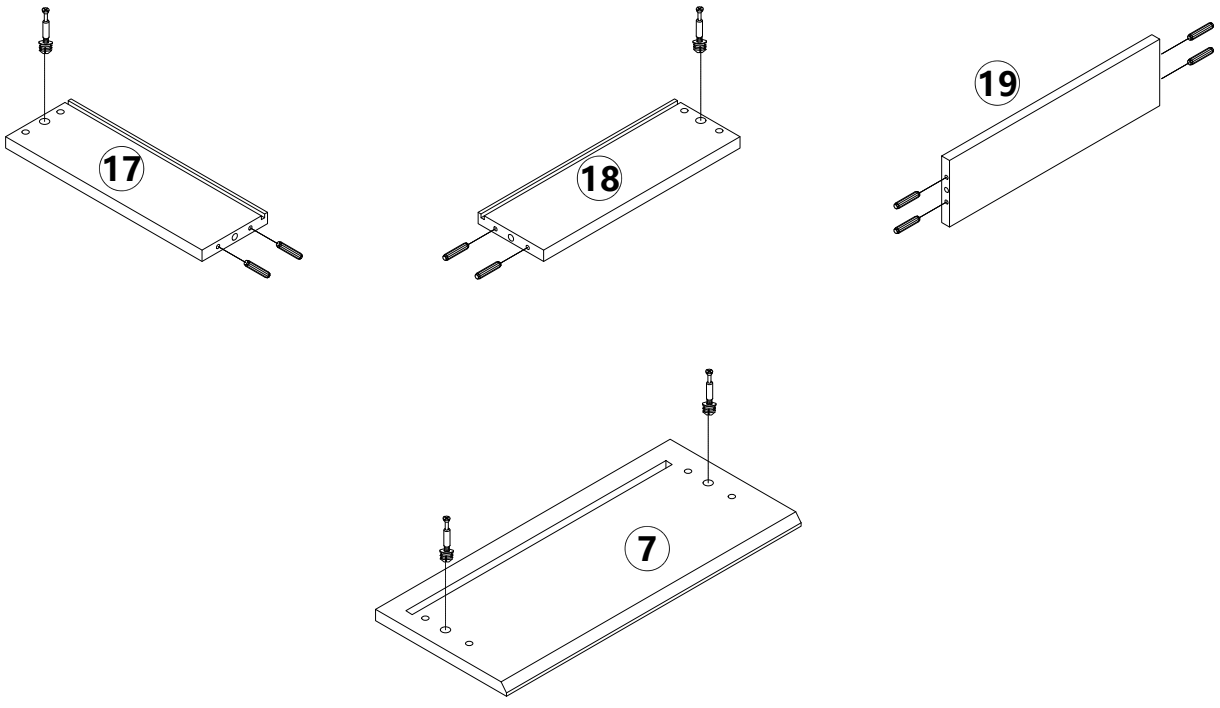

Step4

Ⓐ X12



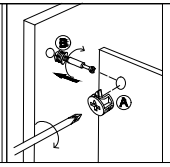

Ⓕ X12



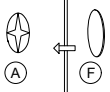

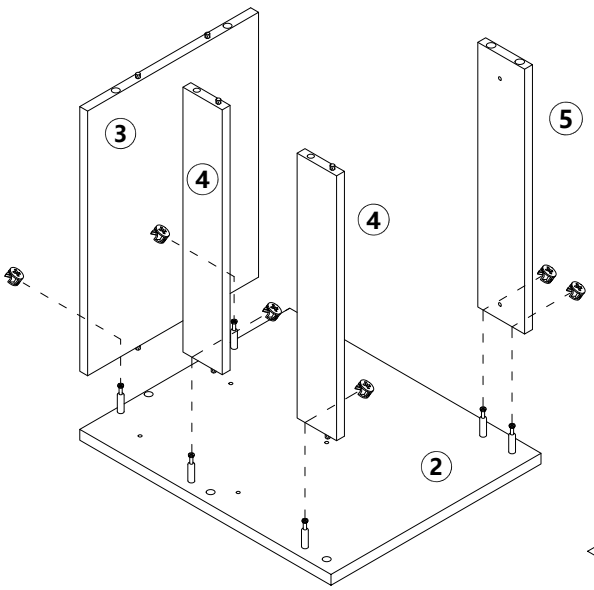

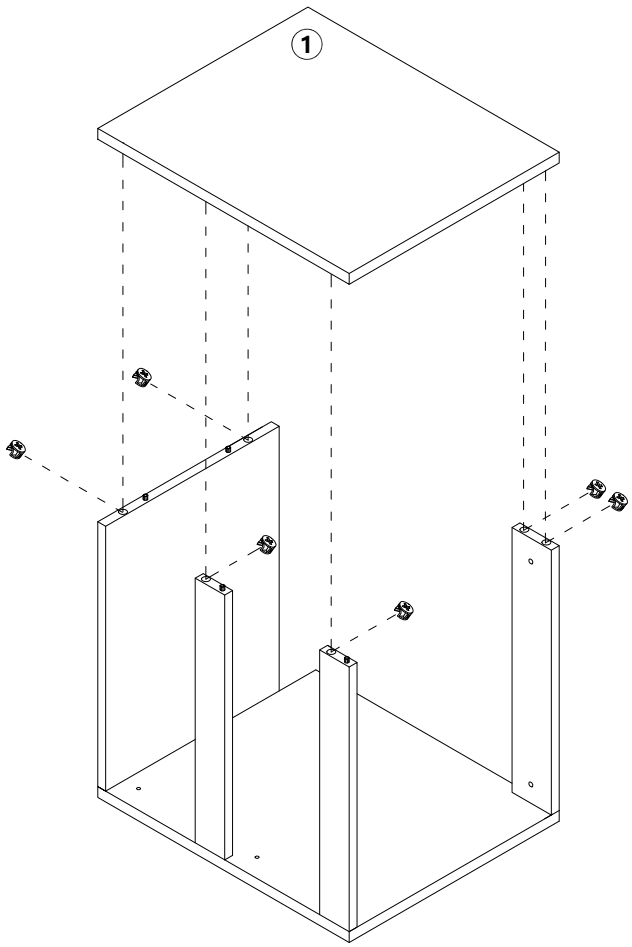

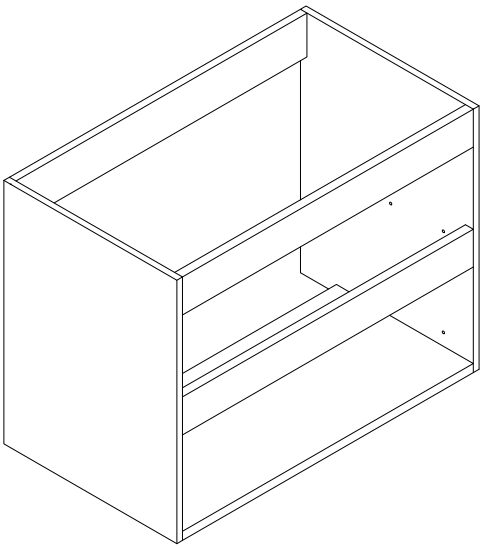

Step5

Ⓐ X10	Ⓕ X10	Ⓔ X4				
		 M4x14mm				

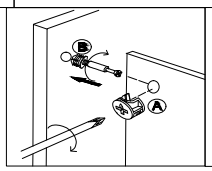

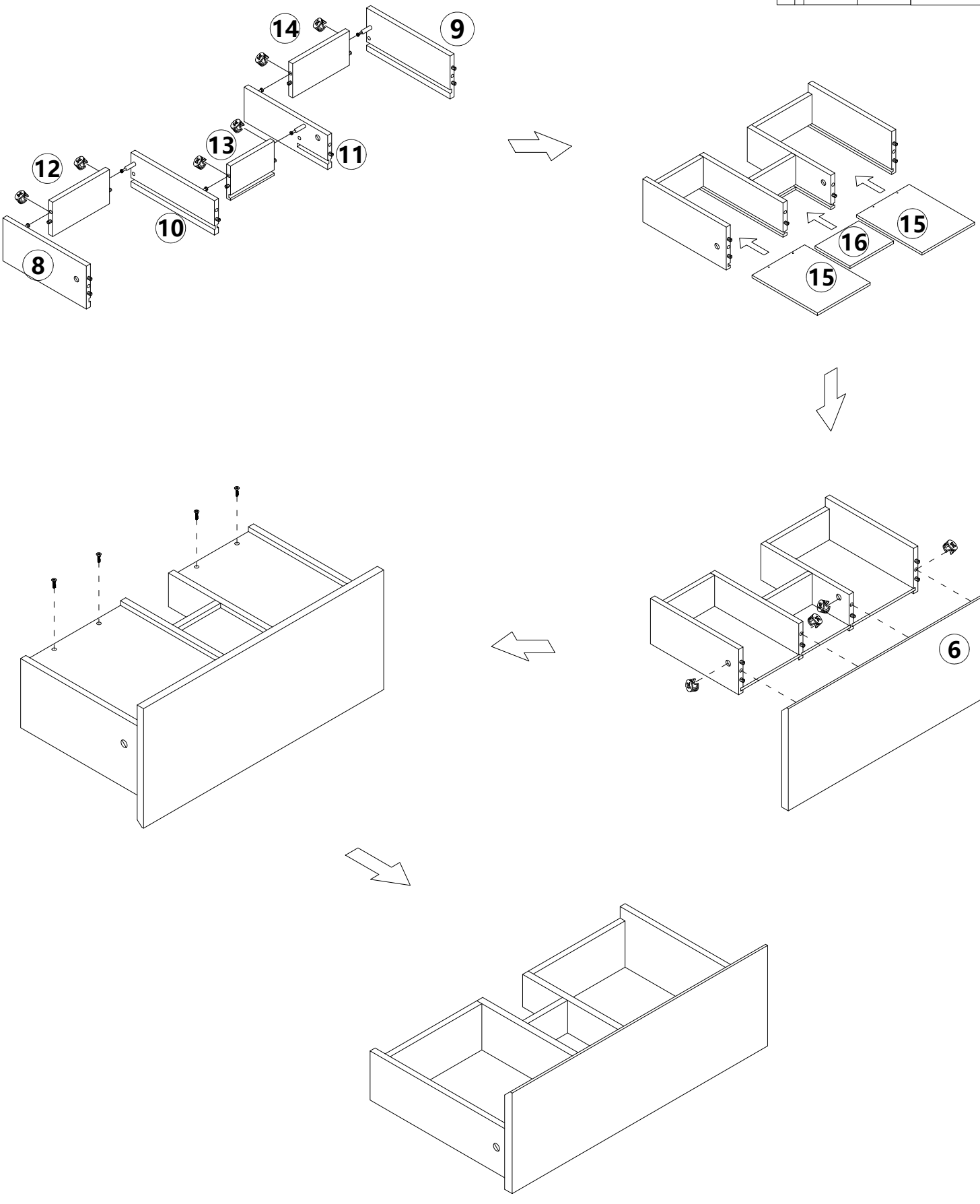

Step6

Ⓐ X4	Ⓕ X4	Ⓔ X2				
		 M4x14mm				

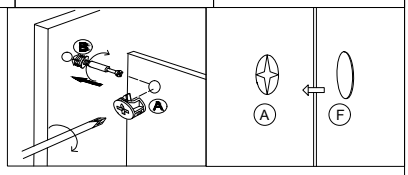

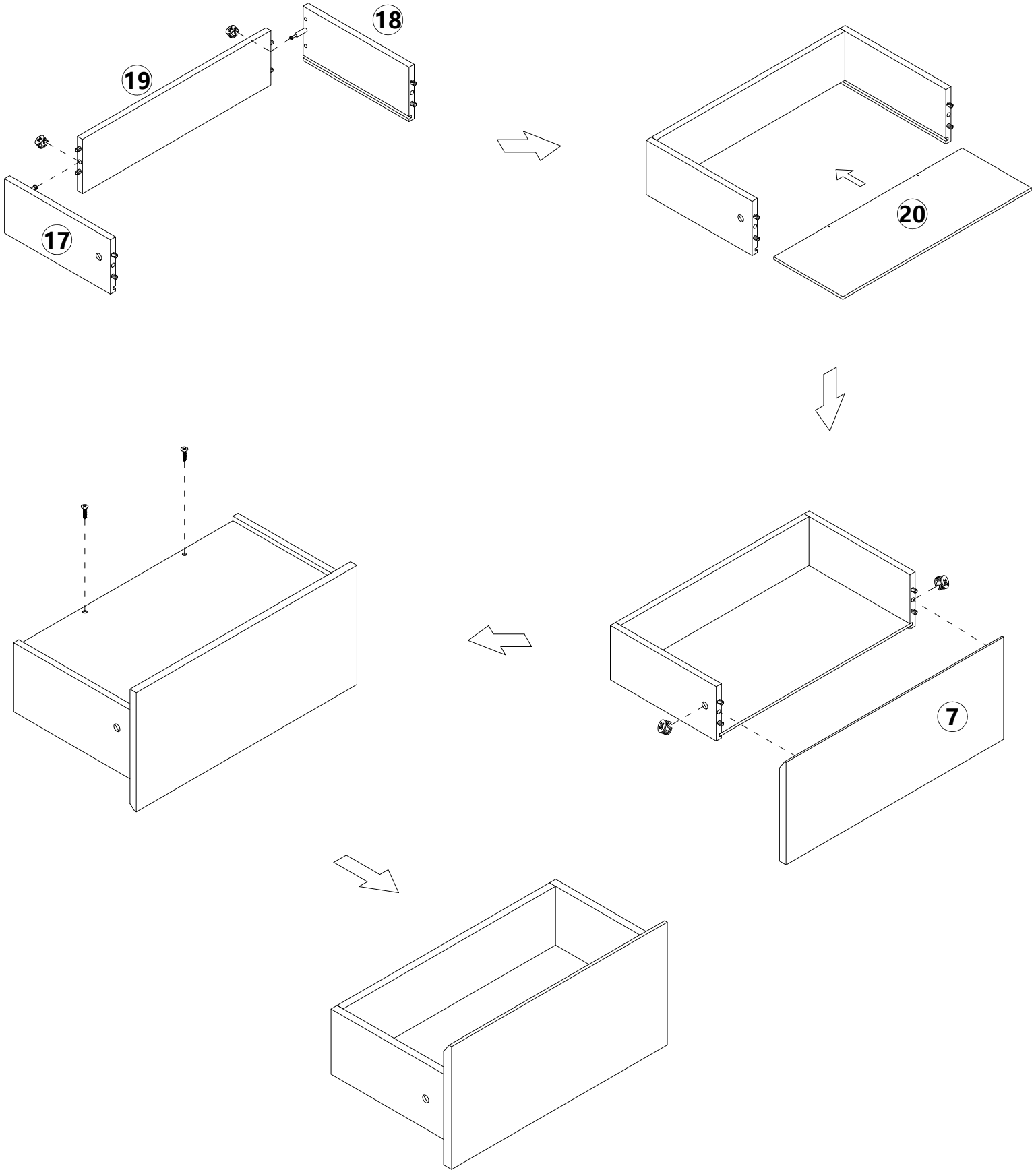

Step7

Ⓔ X24	Ⓓ X2
 M4x14mm	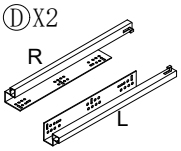

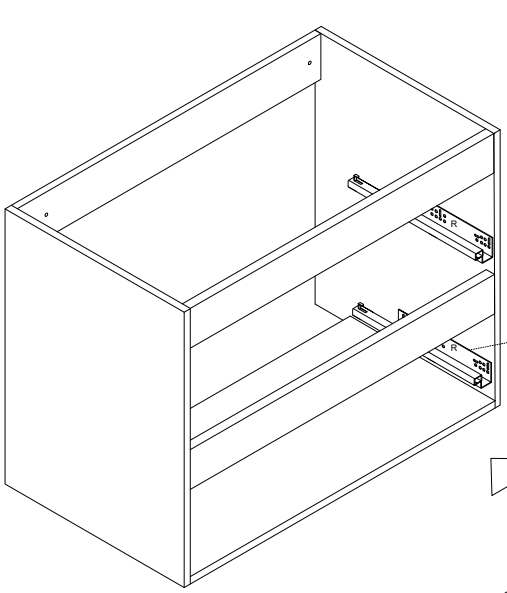

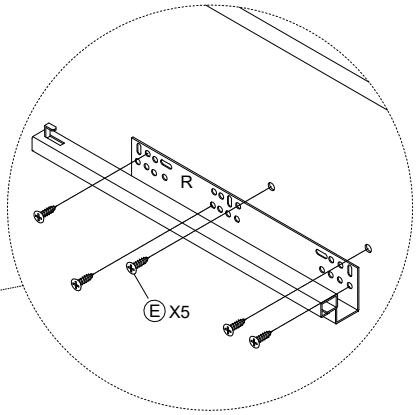

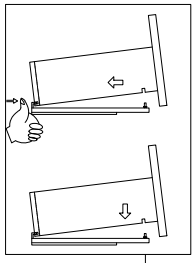

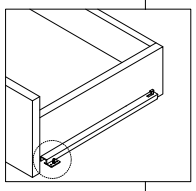

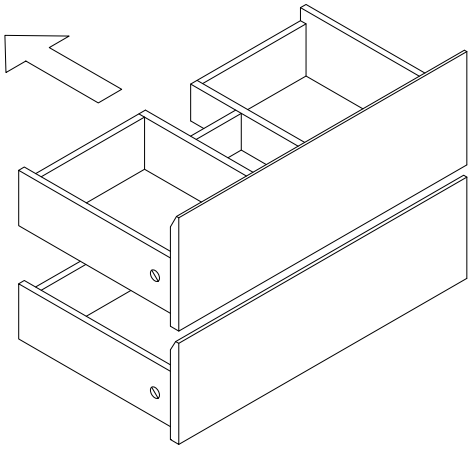

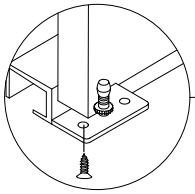

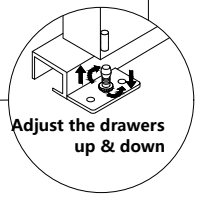

Step8

Ⓖ X2	Ⓔ X16
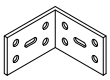	 M4x14mm

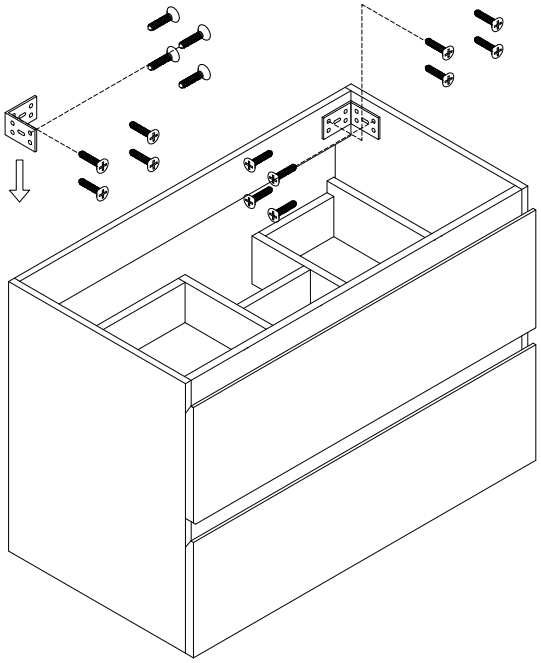

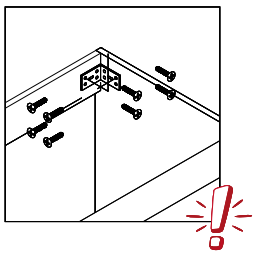

Step9

Ⓗ X2	Ⓘ X2					
						
Ø10x42mm	M6x60mm					

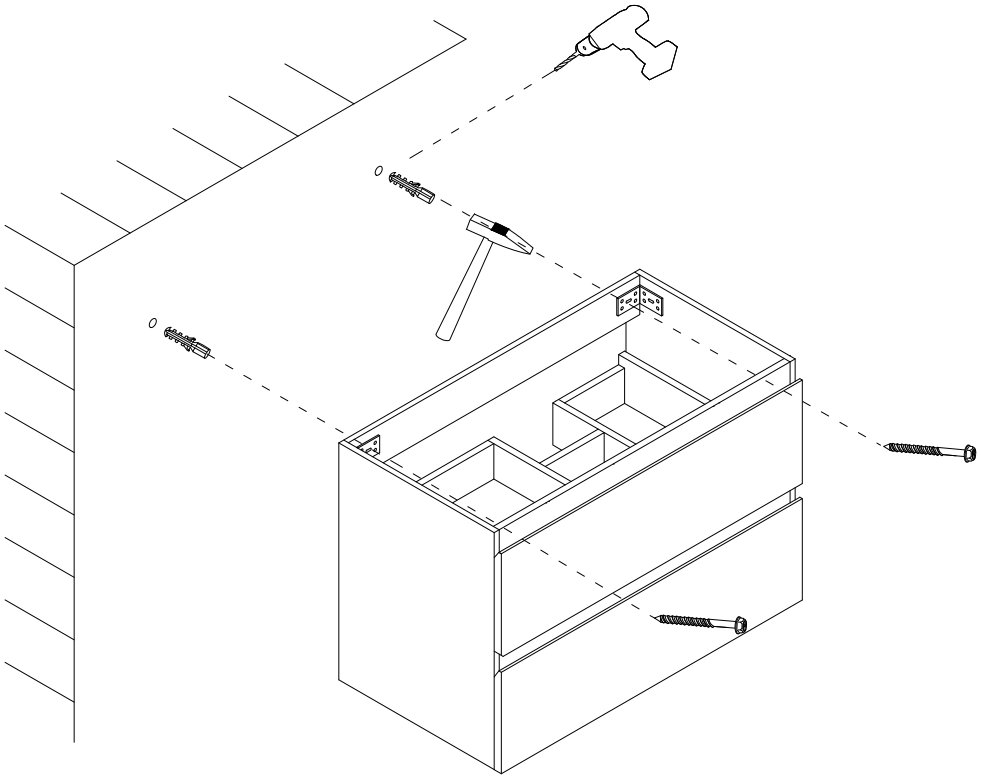

Step10

